EPAMS

Outlet with flange

DESCRIPTION

Part of the siphonic EPAMS system, the outlet with flange is used in case of material incompatibility. The tin-plated stainless steel body outlet is suitable for valleys up to 6 mm thick. This roof outlet can be used for roofs containing extra-thick metal gutters or valleys as well as for roofs waterproofed by synthetic or bituminous membranes.

RECOMMENDED USE

- Siphonic system
- Rainwater

MATERIAL

- Stainless steel body & Aluminium grating

STANDARDS & APPROVALS

- Industry Product Standards:
  - French Technical Approval EPAMS® 5.2/14-2386_V2

ENVIRONMENTAL DATA

- Recycling Information: 99% recyclable

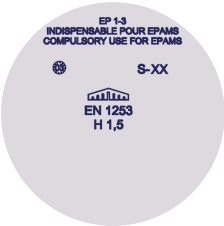

EPAMS
Outlet with flange

DN	DE (mm)	Capacity (l/s)	Surface drainage (m2)	Weight	Product code
50	58	13	260	6.16	171288
75	83	23	460	6.46	171289
100	110	26	520	7.11	171290
125	135	26	520	8.99	172871

All dimensions are in mm and nominal weights are in kg

Implantation of outlets
The design of the siphonic network is based on precise rules for both the dimensioning and the positioning of the various elements, which is why the installation must strictly comply with the isometric drawings provided. The installation of the outlets must be carried out in accordance with PAM Building's specifications. Any modification shall be subject to the prior agreement of PAM Building.

Installation
In its installation instructions, PAM Building recommends the necessary and specific operations for outlets, however, the installer must respect the rules of the art and refer to the recommendations of the suppliers of the waterproofing products.
More information on: https://www.pambuilding.com/epams-system

Layout drawing

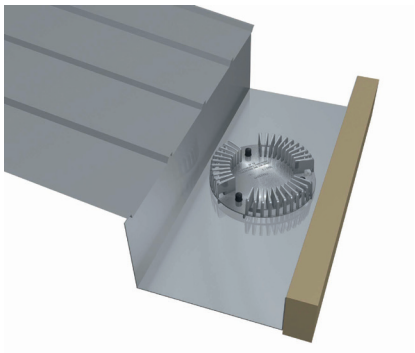

This document is provided for information purposes only and our company reserves the right to modify the information contained herein at any time. Our company declines all responsibility in the event of the use or installation of materials that do not comply with the rules prescribed in this document as well as with the standards, the technical documents and the applicable professional standards. Any orders placed will be subject to our General Terms and Conditions of Sale, available on request. The drawings and/or images are the exclusive property of Saint-Gobain PAM and are confidential. They must not be reproduced or disclosed to any third party without written consent. They may only be used for the purpose for which they were issued and are returnable on request.

Saint-Gobain PAM Bâtiment
21 avenue Camille Cavalier - BP 129 • 54705 • PONT-À-MOUSSON • France • Tel: +33 (0) 383 807 808 • Email: tcbatiment.sgpam@saint-gobain.com • www.pambuilding.com
Société par action simplifiée au capital de 6 812 970,75€ • SIREN 799 283 882 • RCS NANCY